QC STORY PROJECT

PROJECT TITLE :- Elimination of spot burr Drip rail for Scorpio BIW.

Mahindra and Mahindra Ltd,_Nashik Plant, Scorpio Body.

	Plan	Actual
Start Date	**1.08.2012**	**1.08.2012**
Completion Date	**15.10.2012**	**12.10.2012**

Current Status:

Completed

Cross Functional Team

No	Description	Name	Designation	Dept	Phone	Email
1	**Team Leader**	Swapnil Dharrao	Assistant Manager	Production	9765813801	Dharrao.swapnil@mahindra.com
2	**Mentor**	Suryavanshi Ravindra	DGM	Scorpio Body Shop	9881378988	suryavanshi.ravindra@mahindra.com
3	**Member 1**	Sudipto Ghosal	Dy Manager	Production	9922932354	ghosal.sudipta@mahindra.com
4	**Member 2**	Mangesh Gangurde	Assistant Manager	MQA	9922644399	Gangurde.mangesh@mahindra.com
5	**Member 3**	Rajendra Punde	Assistant Manager	Maintenance	9922228599	Punde.rajendra@mahindra.com
6	**Member 4**	Sanket Pimplapure	Assistant Manager	MAPS	9503500998	Pimpalapur.sanket@mahindra.com

1. Select the Theme

Brief description of concern

What :- **Spot burr on Drip rail along the overall area.**

Where:- Roof Framing stage (Z22#40)

When:- In all shift.

Why :- Root cause unknown

How Many :- 1440 incidences for spot burr at Sealer and De burring stage in the month of July.

50 % vehicles having concern.

1. Select the Theme

Area for spot burr Drip Rail

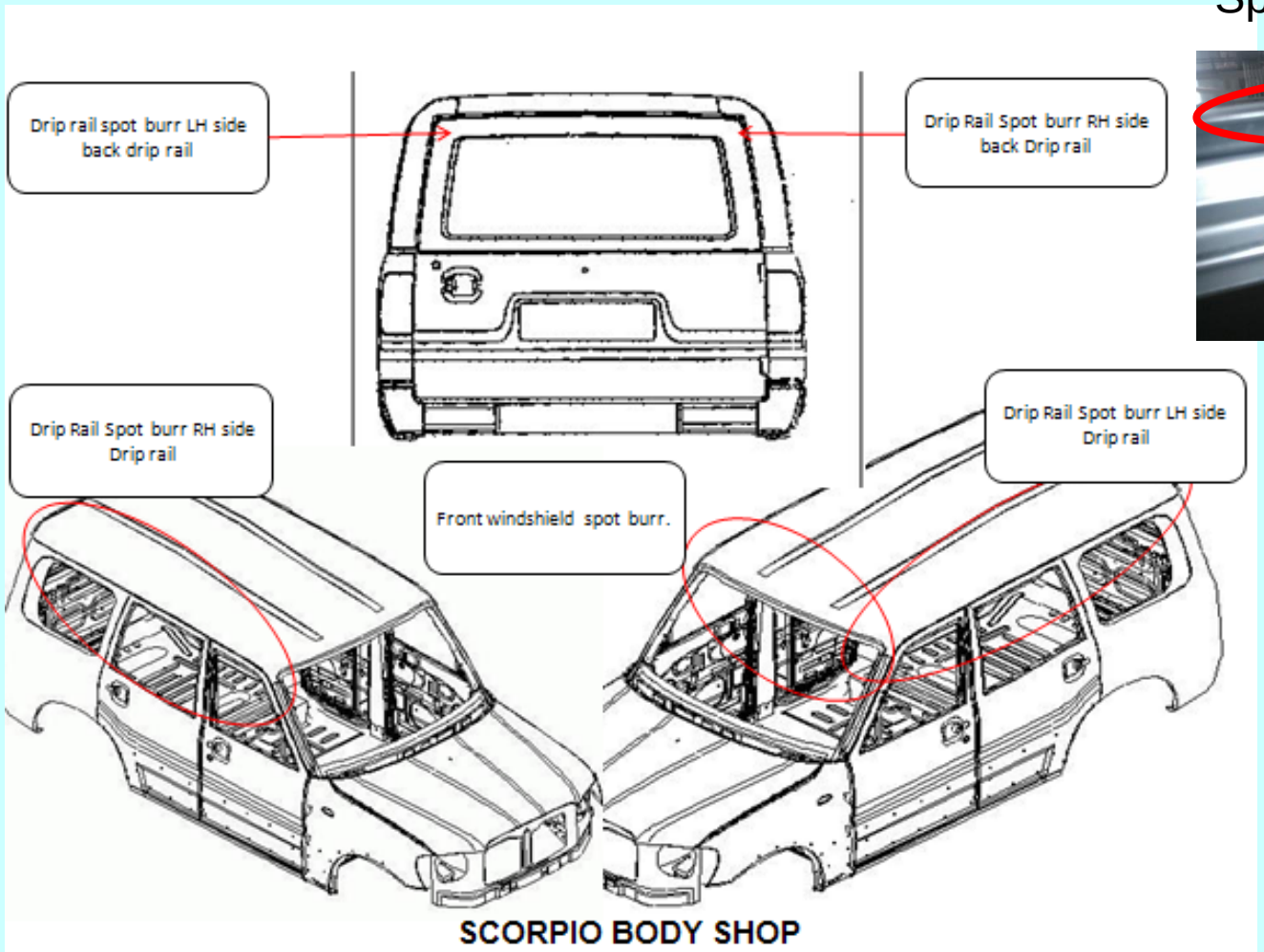

Spot burr drip rail area

2. Justify the choice (reasons)

Spot burr data for month July12

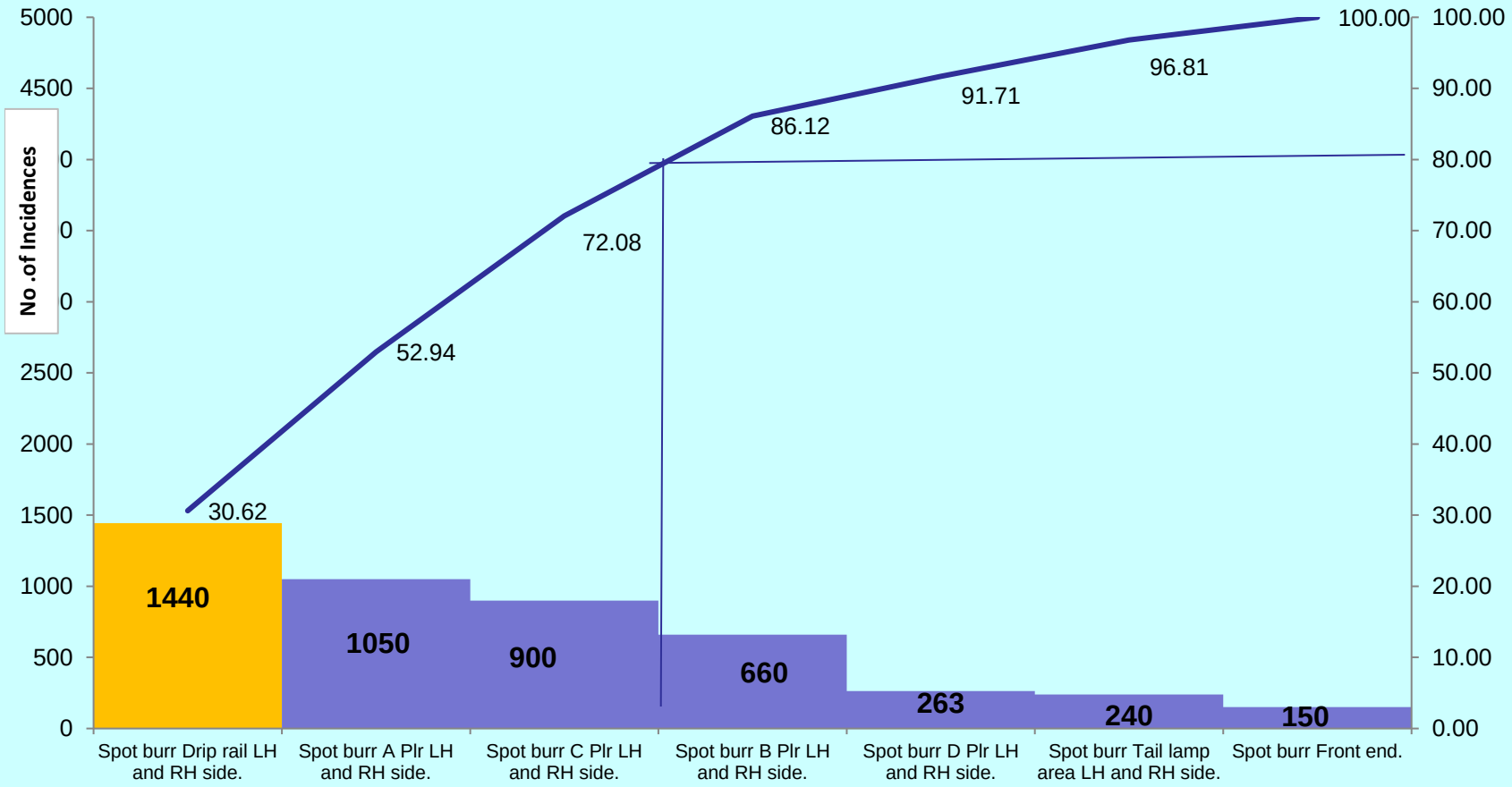

2. Justify the choice (reasons)

- Top most concern at Sealer , De burring stage.
- 100 % spot burr rework at sealer and De burring stage.
- Rework critical and Time consuming.
- Concern reported at NOVA B .
- Spot burr is a safety concern .

2.a Immediate Containment Action

- 100% check and rework at Sealer and De burring stage.

3. Understand the current situation

Flow chart

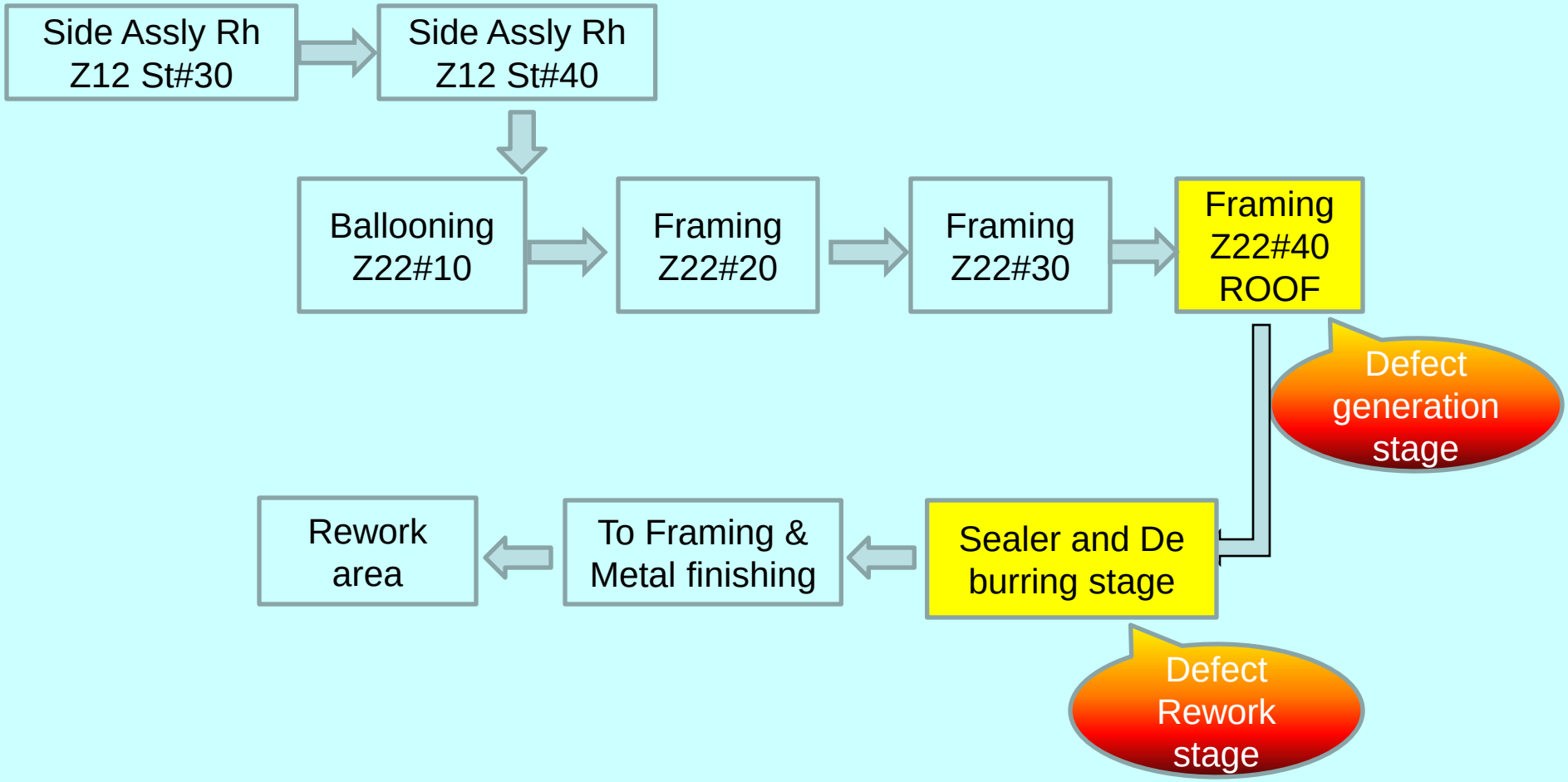

3. Understand the current situation

Process Flow

3. Understand the current situation

Observation of process

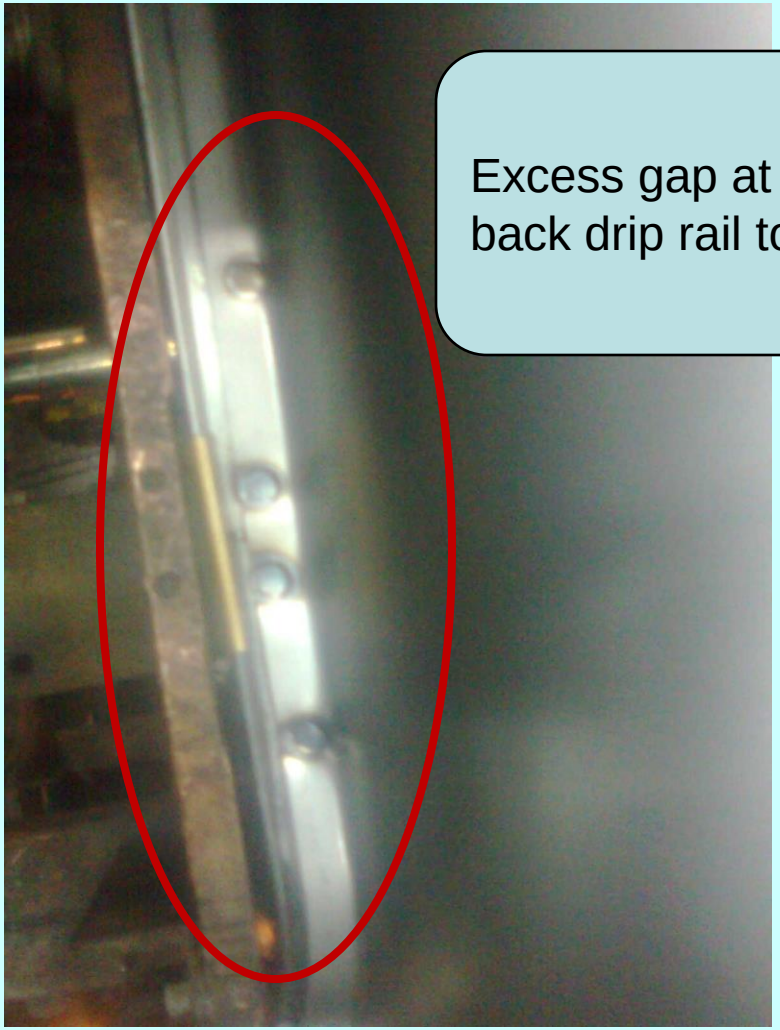

Excess gap at the Right side back drip rail to roof top area.

3. Understand the current situation

Observation of process

Gun alignment disturbed.

4. Select Target

Present Level:

1440 incidences in the month of July.

Target:

FRC Level : Zero rework for burr on sealer and De burring stage.

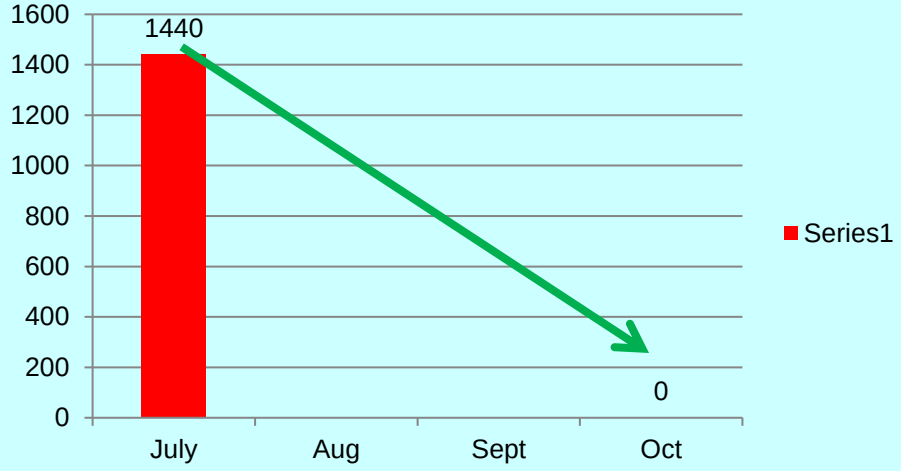

5. Analysis

5.1 Identify possible causes:

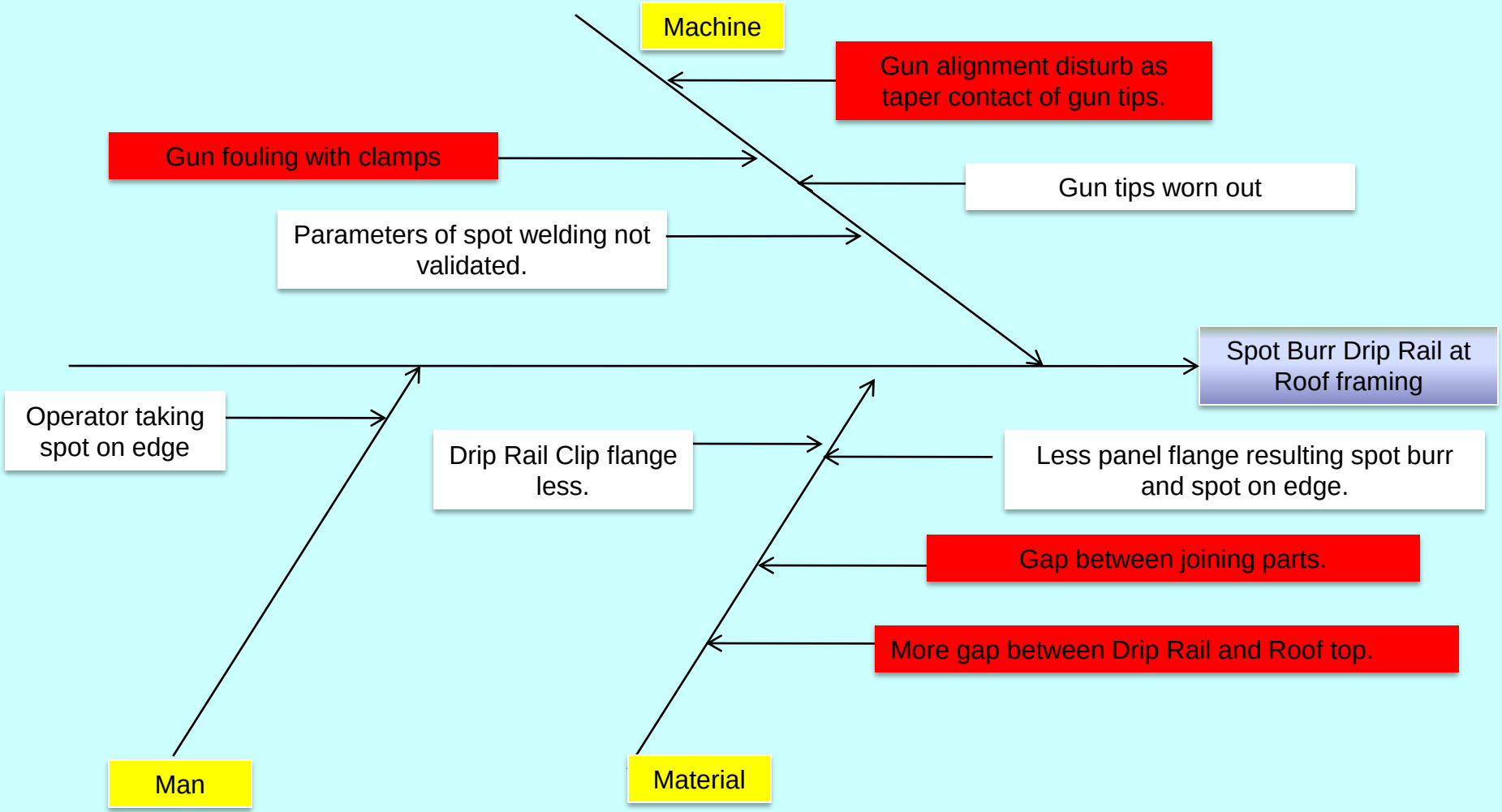

Note- Red blocks indicates the possible causes

5. Analysis

Brainstorming By CFT – Possible causes at Body shop & Vendor End.

Process	Possible Causes
Body Shop and Vendor end.	1) Gun allignment disturbed , not 90 degree.
	2) Less panel flange resulting spot burr and spot on edge.
	3) Gap between joining parts.
	4) Gun fouling with obstacle like clamps.
	5) Gun tip worn out.
	6) Parameters of spot welding not validated.
	7) Operator taking spot on edge.
	8) More gap between Drip Rail and Roof top.
	9) Drip rail clip flange less.

TEST OF HYPOTHESIS

5.2 Confirm the probable cause:

Sr.No	Probable Causes
1	TX 49 , TX 52 at Roof framing station gun alignment disturbed (not 90 degree) and gun slippage during spot welding causing spot burr.
2	TX 48 , TX 51 gun shank design was poor as both tips were not in alignment. (tapered contact)
3	TX 48 and TX 51 gun fouling with the Roof holding clamp so spot on edge and spot burr concern.
4	More gap between Drip Rail and Roof top.
5	Drip rail clip flange less.

TEST OF HYPOTHESIS

5.2 Confirm the probable cause:

No	Probable Cause	Testing and Observations	Conclusion
1	TX 49 , TX 52 at Roof framing station gun alignment disturbed (not 90 degree).	Gun shank not in 90 Degree during spot welding gun slippage and spot burr on the Drip rail.	valid

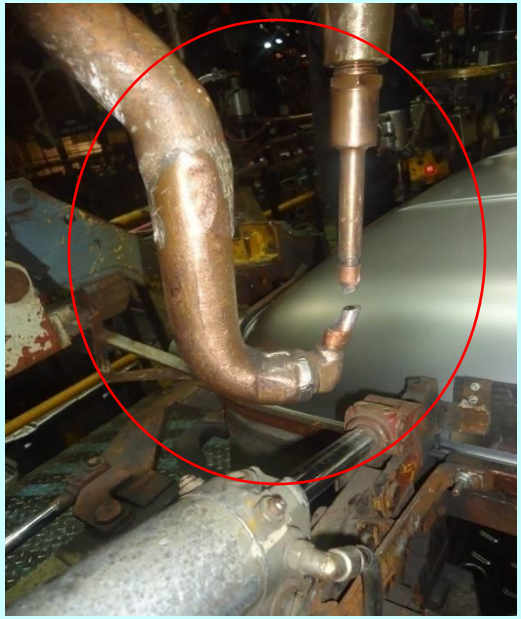

TEST OF HYPOTHESIS

5.2 Confirm the probable cause:

No	Probable Cause	Testing and Observations	Conclusion
2	TX 48 , TX 51 gun shank design was poor as both tips were not in alignment. (tapered contact)	Gun shank not in 90 Degree during spot welding so spot burr on the Drip rail.	valid

TEST OF HYPOTHESIS

5.2 Confirm the probable cause:

No	Probable Cause	Testing and Observations	Conclusion
3	TX 48 and TX 51 gun fouling with the Roof holding clamp.	It is observed that gun shank fouling with clamp and resulting into spot burr.	valid

TEST OF HYPOTHESIS

5.2 Confirm the probable cause:

No	Probable Cause	Testing and Observations	Conclusion
4	More gap between Drip Rail and Roof top.	Roof top position and Drip rail profile not match and resulting into the gap.	valid

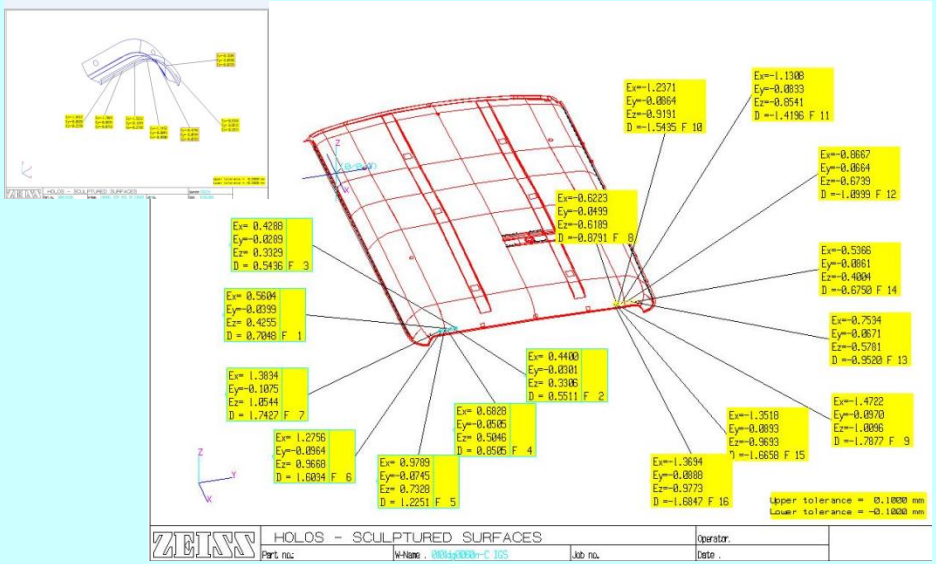

TEST OF HYPOTHESIS

5.2 Confirm the probable cause:

No	Probable Cause	Testing and Observations	Conclusion
5	Drip Rail clip flange less.	Drip rail clip flange check found as per specification.	Invalid

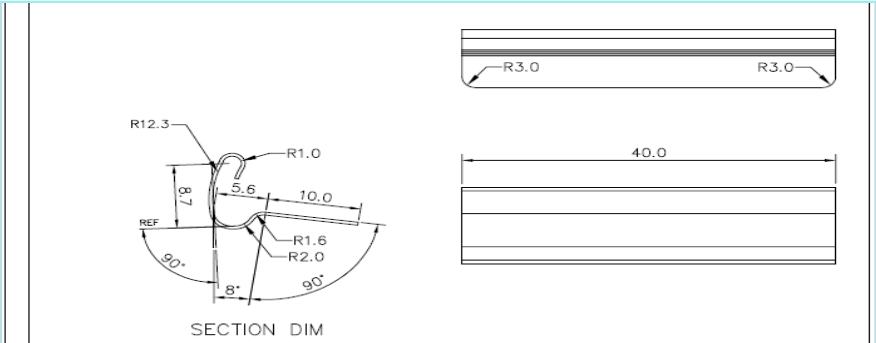

* REF: TS 12130 M FOR OPEN TOLERANCES IN SHEET METAL & TS 12141 B FOR OPEN TOLERANCES IN WELDING STRUCTURE

C OF C : CRITICAL ● MAJOR ◐ KEY ⬢ MINOR NO—SYMBOL

SR.NO.	CONTROL PARAMETERS	SPECIFICATION	C OF C	INSP. FIX. NO.	FREQ.
01	BEND DIM	* R12.3			
02		* R1		TO SUIT DRIP RAIL	
03		* 8.7		SECTION MASTER SAMPLE	
04		* 10			1 PER
05		* 5.6			2 HR
06	LENGTH	40 ±0.5		VERNIER CALIPER	
07	THICKNESS	1.0 ±0.06		MICROMETER	
08	CORNER RADIUS	R3			
09	BENDING RADIUS	R 1.6			
10		R 2.0		TO SUIT DRIP RAIL	
11	BEND ANGLE	90° ± 30'		SECTION MASTER SAMPLE	
12		8° ± 30'			
13	ZINC PLATING	MIN 7.5u		DFT METER	
14	RAW MATERIAL	SPCC (D) 513		OUTSIDE LAB, TEST	1 PER LOT
15				REPORT	

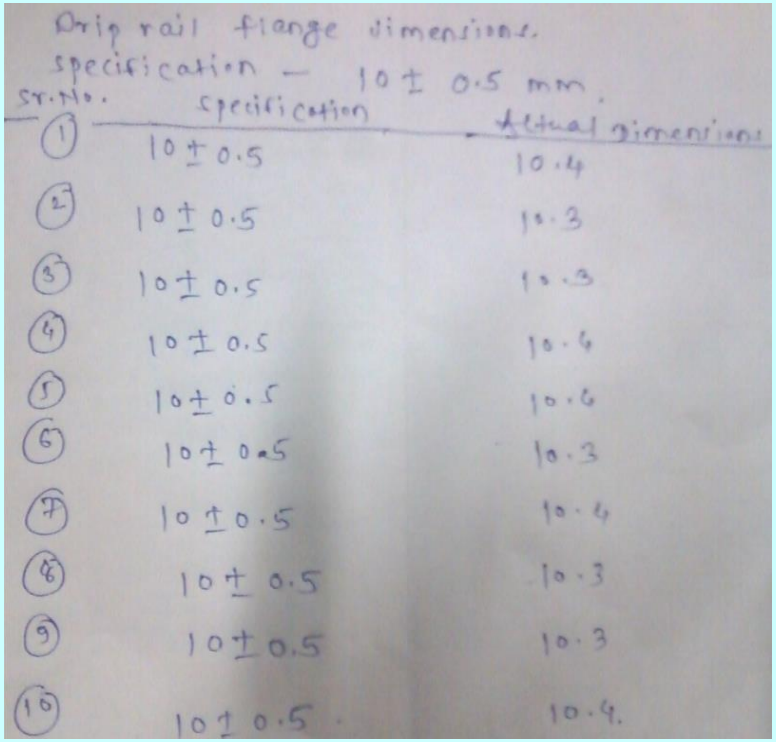

Drip rail flange dimensions.
specification – 10 ± 0.5 mm.

Sr.No.	specification	Actual dimensions
1	10 ± 0.5	10.4
2	10 ± 0.5	10.3
3	10 ± 0.5	10.3
4	10 ± 0.5	10.6
5	10 ± 0.5	10.6
6	10 ± 0.5	10.3
7	10 ± 0.5	10.4
8	10 ± 0.5	10.3
9	10 ± 0.5	10.3
10	10 ± 0.5	10.4

WHY - WHY Analysis

5.3 Identify the root causes:

Sr No	Probable cause	why	why	why	why
1	TX 49 , TX 52 at Roof framing station gun alignment disturbed (not 90 degree).	Upper and lower tip slides on each other.	Play in gun cylinder for upper moving arm.	Cylinder seal worn out.	
2	TX 48 , TX 51 gun shank design was poor as both tips were not in alignment. (tapered contact)	No 90 degree gun contact , Taper contact.	Fixed tip fitting in taper direction.	Old design poor.	
3	TX 48 and TX 51 gun fouling with the Roof holding clamp.	Clamp edge fouling to gun while taking corner spot.			
4	Drip rail profile at the Rear Right side not matches with roof top.	More gap on Right side roof top and drip rail profile.	Drip rail profile not as per dimension.		

6. Implement the corrective measures

6.1 Actions Decided

SN	Root Cause	Action Plan	Target Dt	Resp	Status
1	Play in gun cylinder as Cylinder seal worn out.	1.TX 49 and TX 52 gun cylinder alignment corrected by gun cylinder servicing. 2. Gun PM frequency decided as monthly.	4.08.2012	Rajendra	G

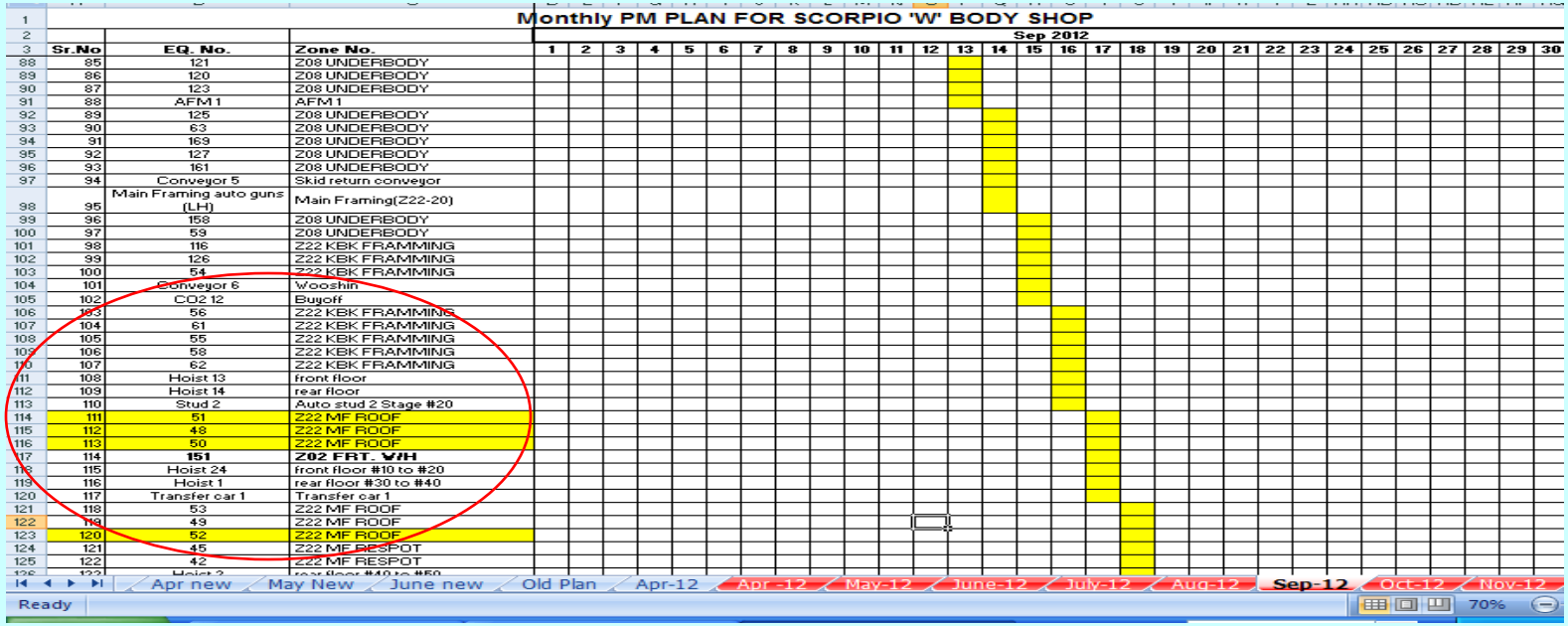

Monthly PM PLAN FOR SCORPIO 'W' BODY SHOP

Sep 2012

Sr.No	EQ. No.	Zone No.	1	2	3	4	5	6	7	8	9	10	11	12	13	14	15	16	17	18	19	20	21	22	23	24	25	26	27	28	29	30
85	121	Z08 UNDERBODY																														
86	120	Z08 UNDERBODY																														
87	123	Z08 UNDERBODY																														
88	AFM 1	AFM 1																														
89	125	Z08 UNDERBODY																														
90	63	Z08 UNDERBODY																														
91	169	Z08 UNDERBODY																														
92	127	Z08 UNDERBODY																														
93	161	Z08 UNDERBODY																														
94	Conveyor 5	Skid return conveyor																														
95	Main Framing auto guns (LH)	Main Framing(Z22-20)																														
96	158	Z08 UNDERBODY																														
97	59	Z08 UNDERBODY																														
98	116	Z22 KBK FRAMMING																														
99	126	Z22 KBK FRAMMING																														
100	54	Z22 KBK FRAMMING																														
101	Conveyor 6	Wooshin																														
102	CO2 12	Buyoff																														
103	56	Z22 KBK FRAMMING																														
104	61	Z22 KBK FRAMMING																														
105	55	Z22 KBK FRAMMING																														
106	58	Z22 KBK FRAMMING																														
107	62	Z22 KBK FRAMMING																														
108	Hoist 13	front floor																														
109	Hoist 14	rear floor																														
110	Stud 2	Auto stud 2 Stage #20																														
111	51	Z22 MF ROOF																														
112	48	Z22 MF ROOF																														
113	50	Z22 MF ROOF																														
114	**151**	**Z02 FRT. W/H**																														
115	Hoist 24	front floor #10 to #20																														
116	Hoist 1	rear floor #30 to #40																														
117	Transfer car 1	Transfer car 1																														
118	53	Z22 MF ROOF																														
119	49	Z22 MF ROOF																														
120	52	Z22 MF ROOF																														
121	45	Z22 MF RESPOT																														
122	42	Z22 MF RESPOT																														

Apr new | May New | June new | Old Plan | Apr-12 | Apr-12 | May-12 | June-12 | July-12 | Aug-12 | Sep-12 | Oct-12 | Nov-12

Ready 70%

6. Implement the corrective measures

6.1 Actions Decided

SN	Root Cause	Action Plan	Target Dt	Resp	Status
2	TX 48 , TX 51 gun shank design was poor .	New shank design done for 90 degree alignment and replacing older tip with cap tip.	21.09.2012	Sanket	G

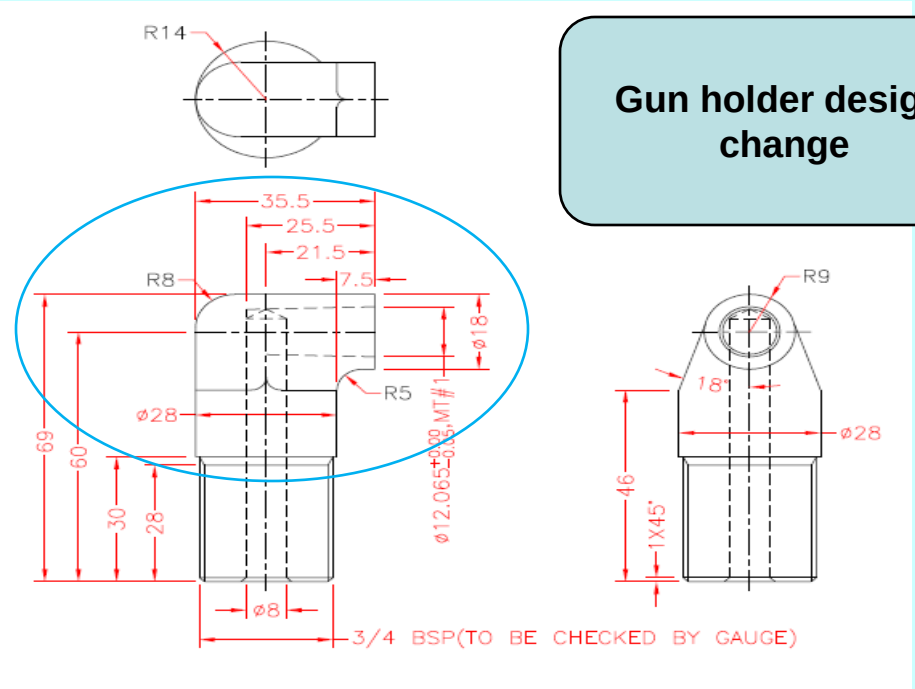

Gun holder design change

6. Implement the corrective measures

6.1 Actions Decided

SN	Root Cause	Action Plan	Target Dt	Resp	Status
3	Clamp edge fouling to gun while taking corner spot.	Taper provided to the both LH and RH side clamp.	19.08.2012	Alesham	G

6. Implement the corrective measures

6.1 Actions Decided

SN	Root Cause	Action Plan	Target Dt	Resp	Status
4	Drip rail profile variation.	Drip rail profile corrected at Supplier end .	23.09.2012	Ghosal	G

Before

Profile not match as more gap.

After

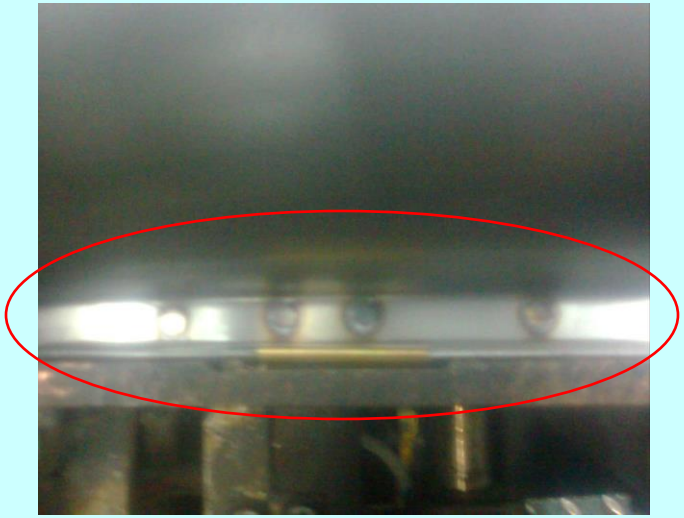

Drip rail profile corrected.

7. Check & confirm the results & effects

7.1 Verify Results:

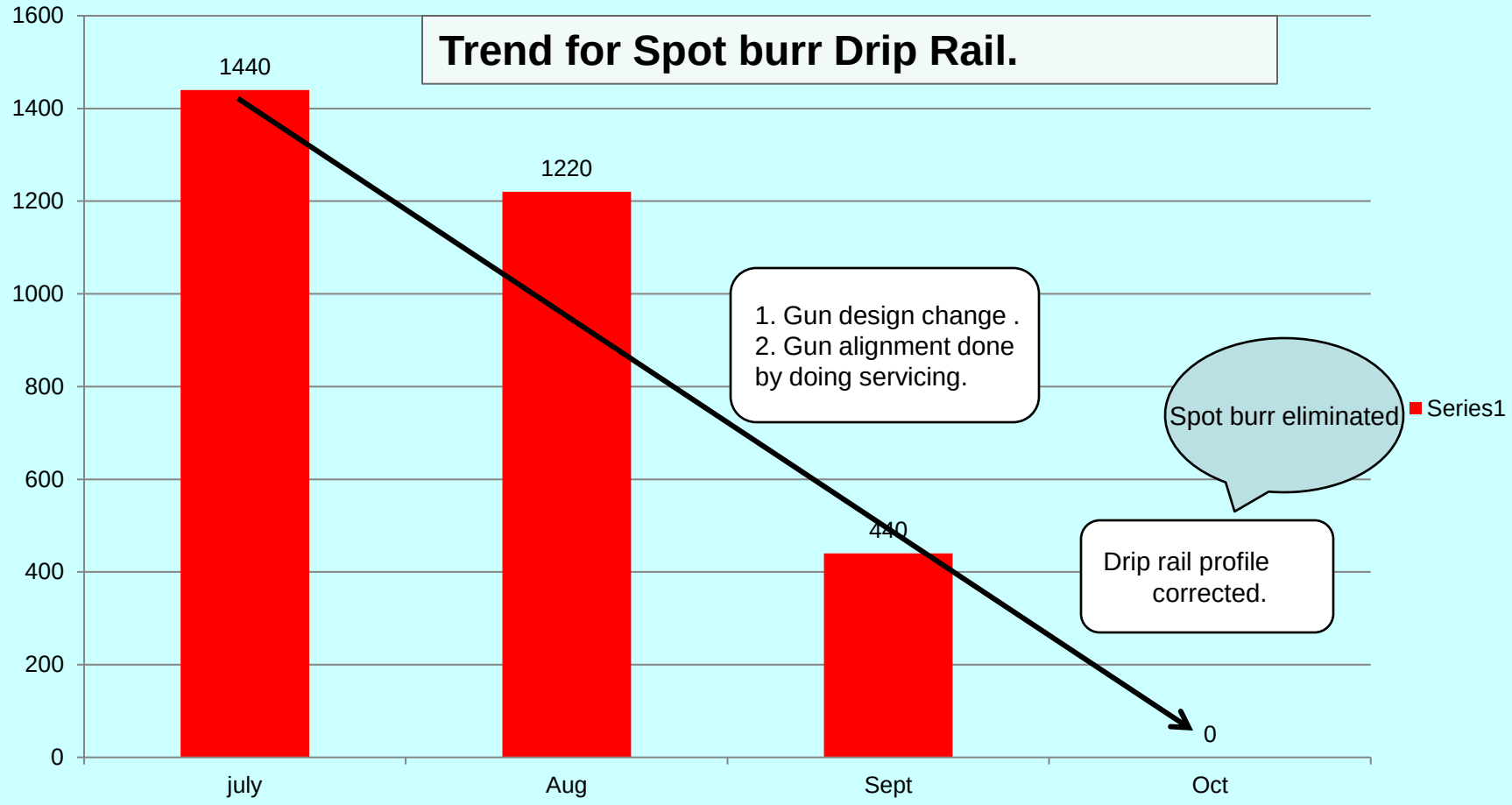

7. Check & confirm the results & effects

7.2 Full Scale Implementation plan:

1. All decided actions implemented.

2. Effectiveness of actions has been audited on 12.10.2012 by MQA team

7.Check & confirm the results & effects

7.3 Tangible benefits:

1. Spot burr concern reduced to Zero from 1400 incidence in the month of July to 0 in the month of October.
2. Zero incidences at NOVA B , NOVA C, RFI in the month of September and October.

Check & confirm the results & effects (Cont…)

7.3 Intangible benefits:

1. Morale improved.

2. Team Work Built up.

3. Confidence Boost up.

8. Standardisation

8.1 Updation of documents:

1.Gun holder drawing Approval/certification.

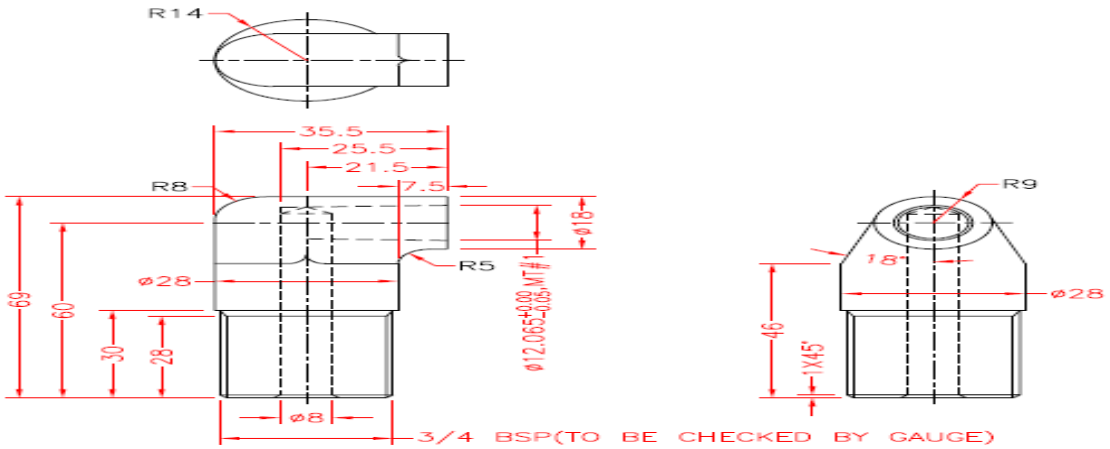

MATL—SEAMLLOY 100 (CLASS 3 ALLOY)
HARDNESS—90—100 HRB

DRN	MPB	NASH ROBOTICS & AUTOMATION (P) LTD. SATPUR, NASIK-422007		
CHD				
TRC				
APPD		CUSTOMER— M/S MAHINDRA (IDAM)		REF.DRG.NO. AS PER SKETCH
DATE	21.09.12			
SCALE	1 : 1	TITLE— ADAPTOR		DRG. NO 06—0384
PROJ	3RD ANGLE			REV.—0
MATL	AS NOTED	ALL DIMENSIONS ARE IN MM.	CAD FILE NAME 06—0384	SHEET OF

8. Standardisation

8.1 Updation of documents:

2. Monthly PM plan for roof framing guns.

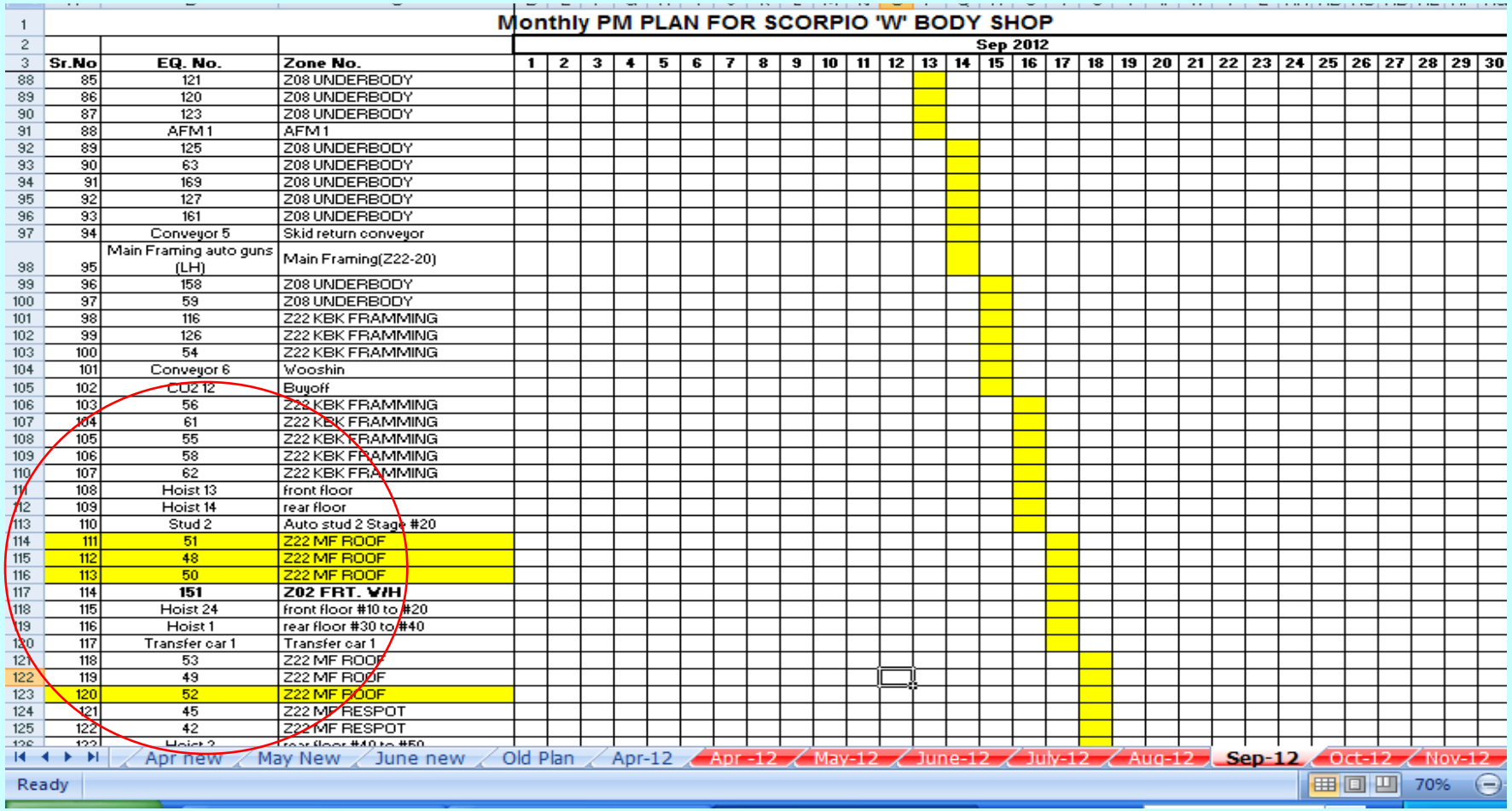

Monthly PM PLAN FOR SCORPIO 'W' BODY SHOP

Sep 2012

Sr.No	EQ. No.	Zone No.	1	2	3	4	5	6	7	8	9	10	11	12	13	14	15	16	17	18	19	20	21	22	23	24	25	26	27	28	29	30
85	121	Z08 UNDERBODY																														
86	120	Z08 UNDERBODY																														
87	123	Z08 UNDERBODY																														
88	AFM 1	AFM 1																														
89	125	Z08 UNDERBODY																														
90	63	Z08 UNDERBODY																														
91	169	Z08 UNDERBODY																														
92	127	Z08 UNDERBODY																														
93	161	Z08 UNDERBODY																														
94	Conveyor 5	Skid return conveyor																														
95	Main Framing auto guns (LH)	Main Framing(Z22-20)																														
96	158	Z08 UNDERBODY																														
97	59	Z08 UNDERBODY																														
98	116	Z22 KBK FRAMMING																														
99	126	Z22 KBK FRAMMING																														
100	54	Z22 KBK FRAMMING																														
101	Conveyor 6	Wooshin																														
102	CO2 12	Buyoff																														
103	56	Z22 KBK FRAMMING																														
104	61	Z22 KBK FRAMMING																														
105	55	Z22 KBK FRAMMING																														
106	58	Z22 KBK FRAMMING																														
107	62	Z22 KBK FRAMMING																														
108	Hoist 13	front floor																														
109	Hoist 14	rear floor																														
110	Stud 2	Auto stud 2 Stage #20																														
111	51	Z22 MF ROOF																														
112	48	Z22 MF ROOF																														
113	50	Z22 MF ROOF																														
114	**151**	**Z02 FRT. W/H**																														
115	Hoist 24	front floor #10 to #20																														
116	Hoist 1	rear floor #30 to #40																														
117	Transfer car 1	Transfer car 1																														
118	53	Z22 MF ROOF																														
119	49	Z22 MF ROOF																														
120	52	Z22 MF ROOF																														
121	45	Z22 MF RESPOT																														
122	42	Z22 MF RESPOT																														
123	Hoist 2	rear floor #40 to #50																														

Apr new | May New | June new | Old Plan | Apr-12 | Apr-12 | May-12 | June-12 | July-12 | Aug-12 | Sep-12 | Oct-12 | Nov-12

Ready 70%

8. Standardisation

8.1 Updation of documents:

3. Fixture history card for the Roof framing clamp.

FIXTURE HISTORY CARD					
ZONE:	Z22				DEPT : MFG ENGG.-SCORPIO BODY
FIXTURE NO.	Z22-40		FREQUENCY : 6 Months and/or whenever changes done		
ASSY NAME:	Main framing 40				
DATE	UNIT NO	ITEM NO.	CONCERNS	CHANGES DONE/ ACTION TAKEN	REMARKS
17/9/11			Drip rail damage- spot on edge	Nylon stopper provided on edge of guard mounting	
22/09/2011			Gap brazing joint Rh	Catch movement made free	FTBO Sept-11
29/11/2011			HEAVY DING ON ROOF TOP	Roof guide rod profile changed	FTBO NOV-11
29/11/2011			RH Brazing joint undercut	Stopper provided at frt side to clamp to restict the roof frt variations	FTBONov-11
40614			SPOT DAMAGE DRIP RAIL RH ABOVE QTR WINDOW	Nylon stopper to be provided	FTBO NOV-11
23/12/2011			Brazing overlap joint	Joggle clamp force increased by increasing the flow control	FTBO DEC-11
17/01/2012			Lh Side Less gap\Overlap	Lh roof locator in X-Dirn. Matched as per airbag body	FTBO Jan-12
22/02/12			Damage at roof top assly RH Front	Provided acrylic guard	i4-46820
24/3/12			Drip rail spot damage	Provided cu plate guard	i4-62629
14/4/12			Drip rail spot damage	Provided cu plate at RH side	CA 2P 553
2/5/2012			Damage at roof top assly LH Front	Provided new Carbon fibre guard	i4-92709
15.05.12			Damage back side drip rail corner	Nylock nut provided for copper plate mtg bolt to avoid loosening of bolt	CA3P147
19.8.2012			Clamp edge fouling to gun while taking corner spot at front windshield area.	Taper provided to the both LH and RH side clamp.	

8. Standardisation

8.2 Training:

1. OPL

8.3 Additional Audit / Check

1. Supplier Audit
2. 2A-2B audit
3. Supervisory check sheet

9. Summarise & Plan future actions

9.1 Conclusion:

Spot burr concern at Drip rail eliminated by modifying the gun holder design and Drip rail profile which shows that gun alignment and part geometry are so important factors for spot welding process.

9.2 Horizontal Deployment:

SCDC Body shop.

9.3 Lessons Learnt:

Things Gone Wrong : Poor holder design was done during development.

Things Gone Right : 1.We study the process and modify the holder of Roof framing guns.

2.Drip rail profile correction done.

THANK YOU !!!